SA400 WIRING CONFIGURATIONS

BI - WIRED OPERATION

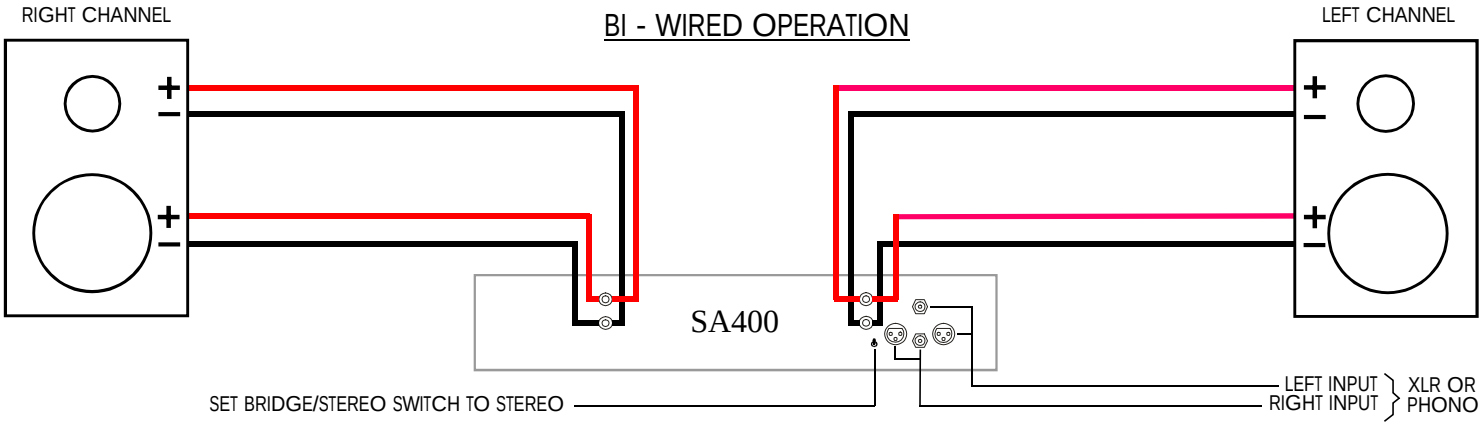

DUAL BRIDGED MONO OPERATION (HIGH POWER)

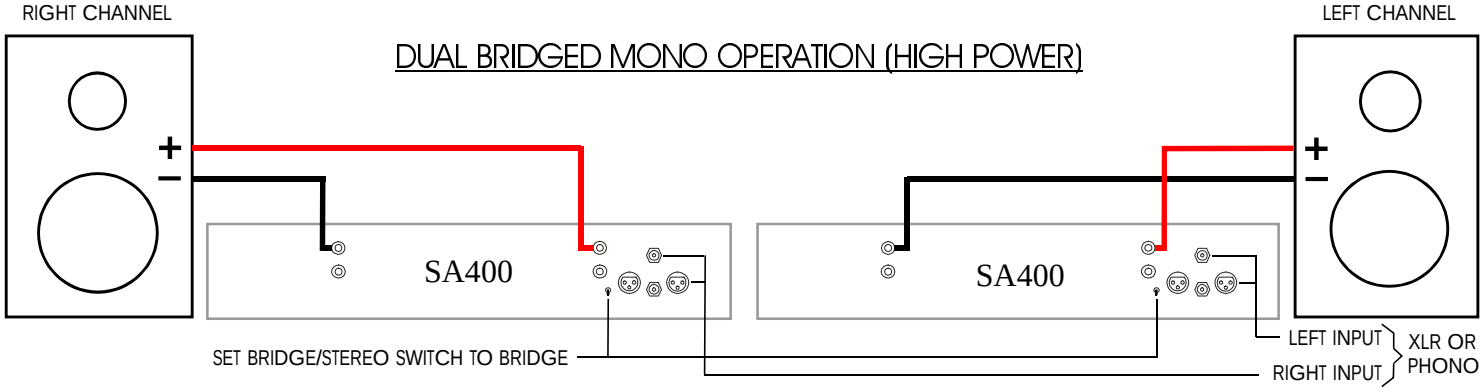

BI - AMPING (HORIZONTAL)

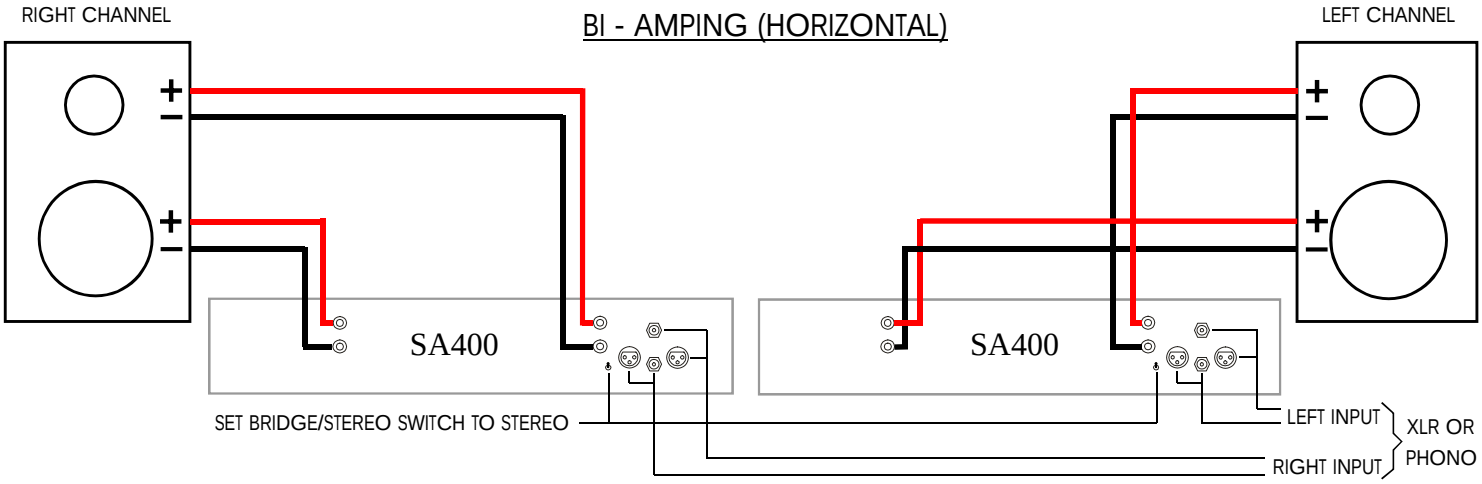
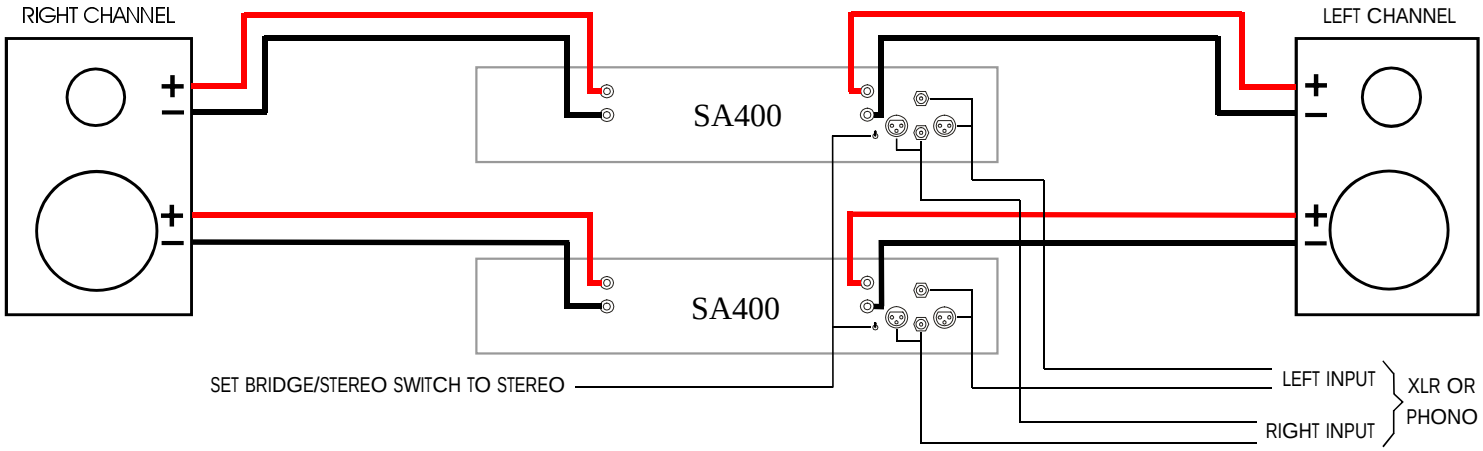
BI - AMPING (VERTICAL)